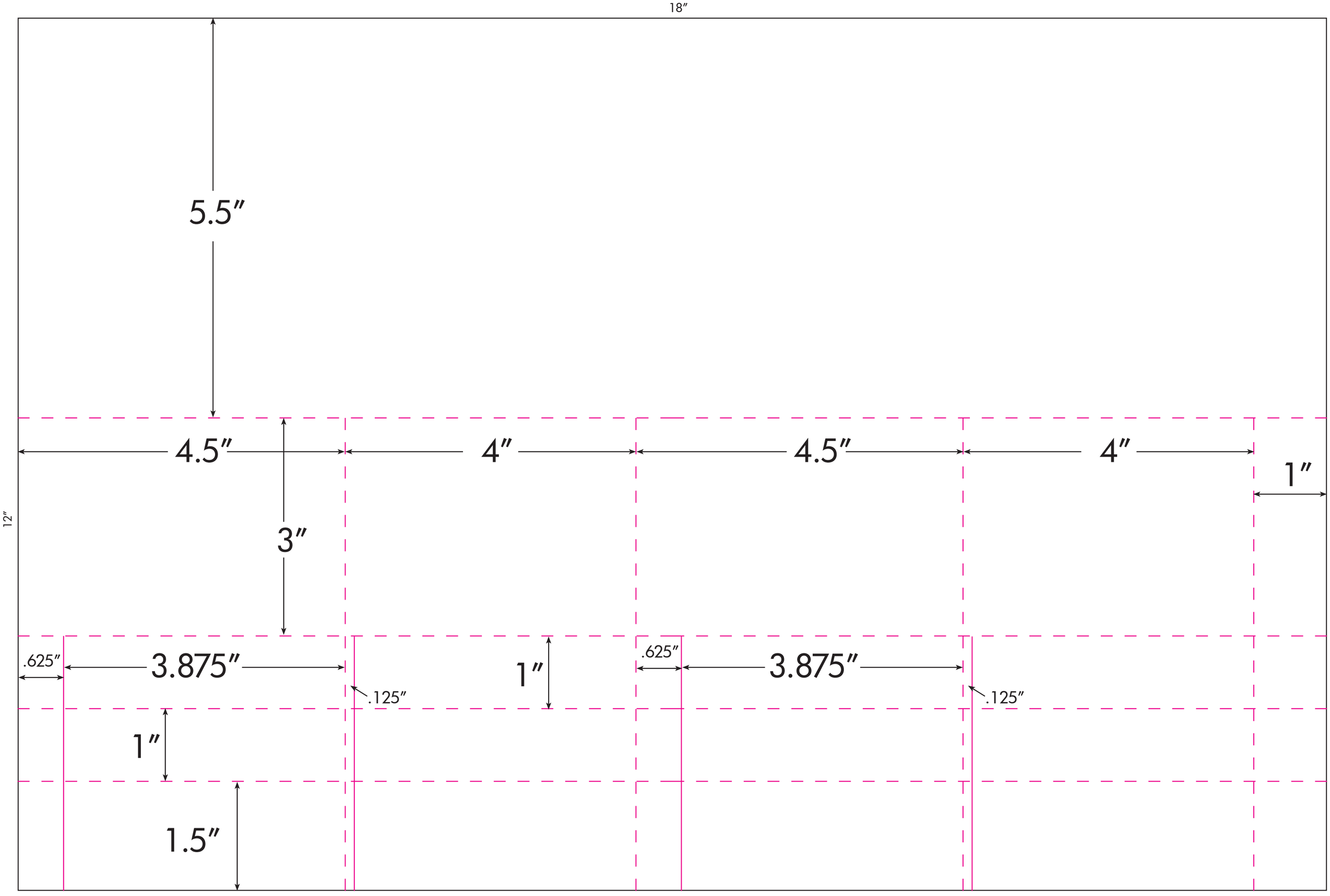
18″
12″
5.5″
4.5″
4″
4.5″
4″
1″
3″
.625″
3.875″
.125″
1″
.625″
3.875″
.125″
1″
1.5″